HSM
Jet Spindle | Quick Start

Box Contents

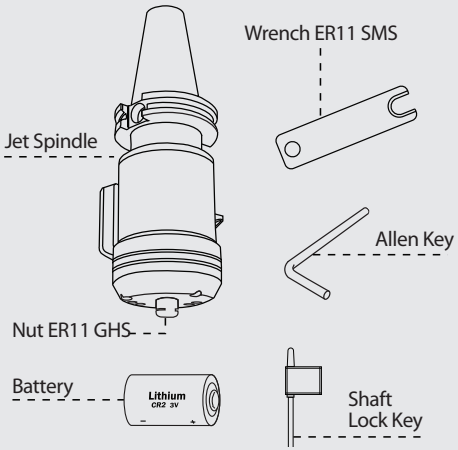

1. Insert battery

A. Open battery compartment by removing the 4 screws with the supplied allen key

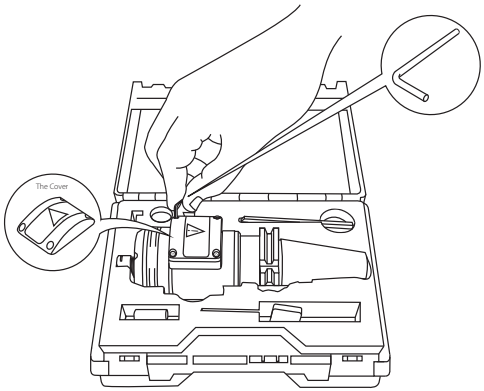

B. Use moderate pressure to insert the lithium CR2 3V battery

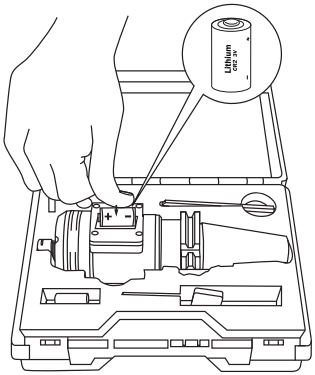

C. Replace screws to close the battery compartment

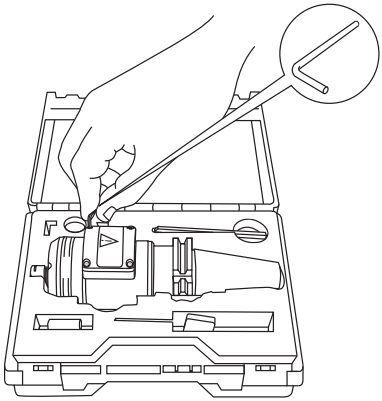

2. Connecting the display

A. Connect the display to the external power and switch ON, then press the CONNECT button on the left

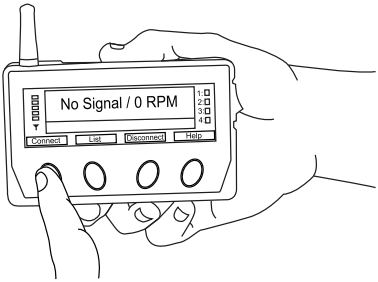

B. First press the CONNECT button, then slide the transmitter across the left side of the display from point 1 to point 2

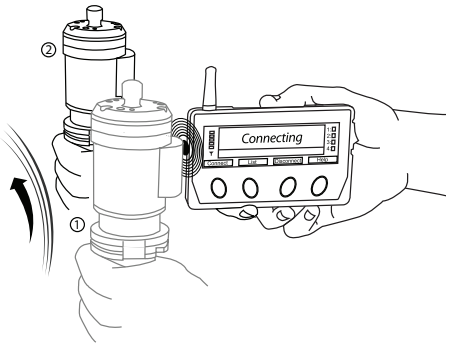

C. "Connected" indication will appear after succesful connection to the spindle

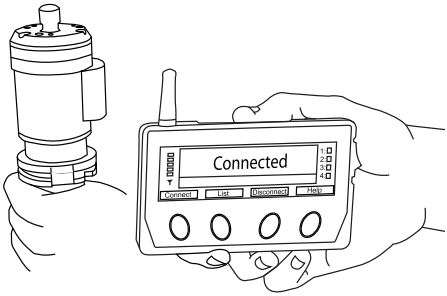

3. Clamping the cutting tool

A. If using an ER32 built-in adaptor, loosen the clamping nut on the adaptor and turn 1.5 rotations counter clockwise

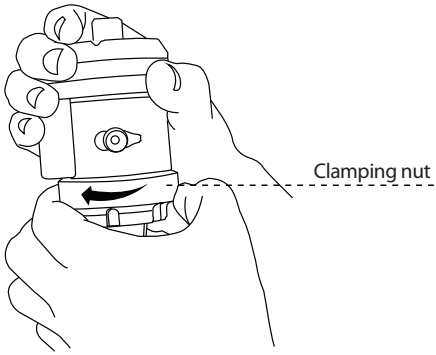

*For specific instructions for different adaptations, see the HSM Jet Spindle user manual

B. Place a specific tool adaptor with ER32 collet chuck into the tool clamping device and release the original ER32 Nut

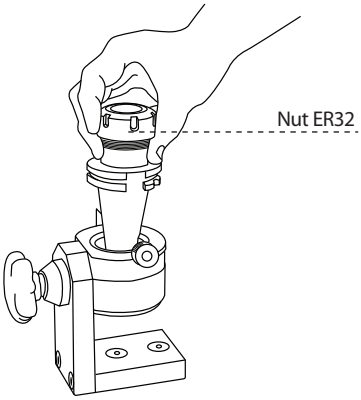

C. Set the ER32 built-in adaptor into the tool holder collet chuck and fasten the clamping nut

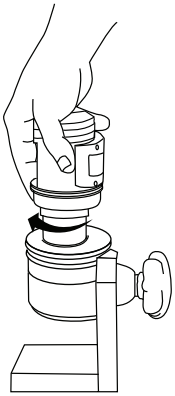

D. Insert the key into the shaft lock hole

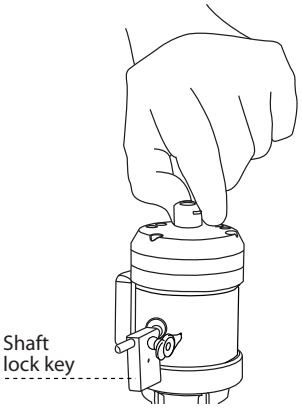

E. Loosen the ER11 nut using the tool provided

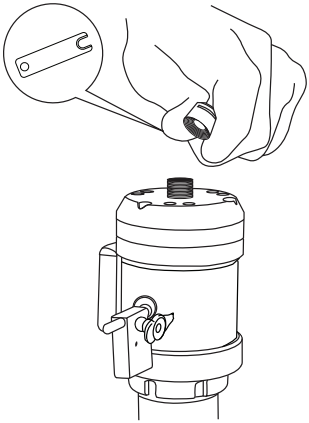

3. Clamping the cutting tool - Continued

F. Use the ER11 spring collet (not supplied) to clamp thecutting tool

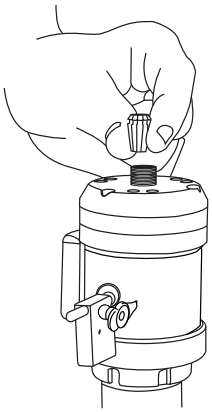

G. Insert the cutting tool

H. Tighten the ER11 nut with the supplied wrench

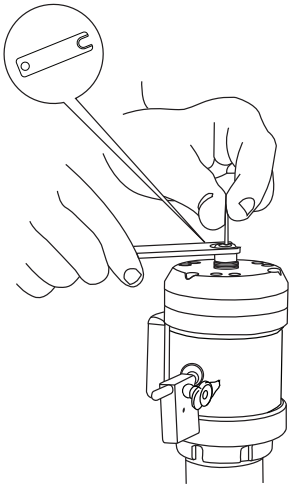

I. Remove the shaft lock key and close the shaft lock hole cover

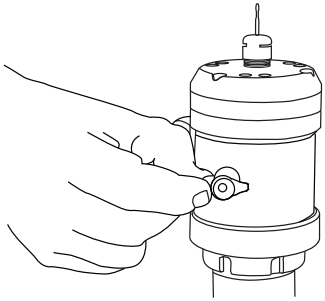

J. The Jet Spindle is now ready to mount on the machine, the same as any other standard tool

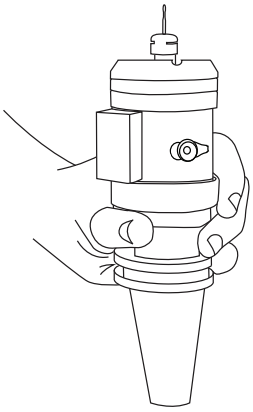

* Don't forget to enable the machine coolant flow
* Don't forget to lock the main machine spindle during Jet Spindle operation